audiophony® EQUIPMENTS

# ESCALE4

4-inch coaxial satellite speaker, 100W, 8 ohms – aluminium housing

A compact and stylish housing made entirely of aluminium, offering a wide range of connection and mounting options.
A range of fabric grilles in various colours is available as an option to ensure the unit blends in perfectly with its surroundings.

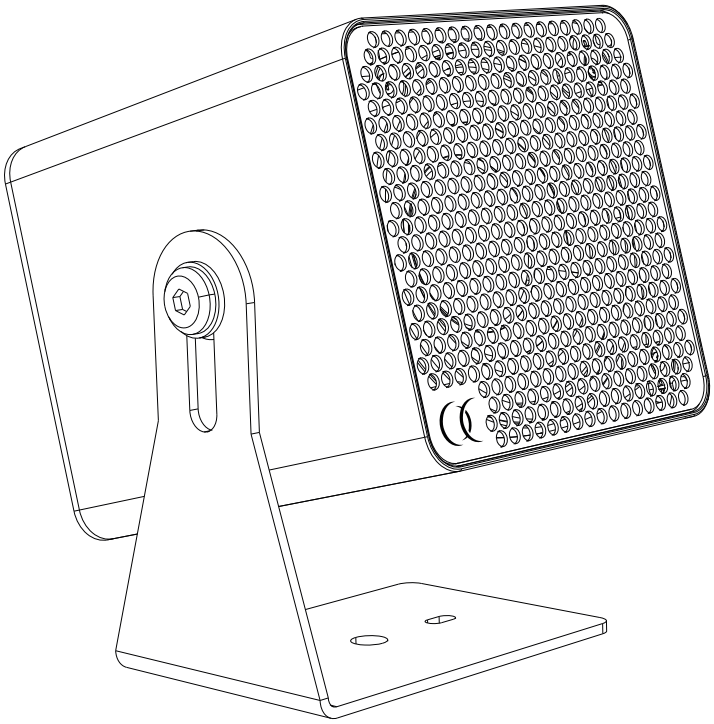

ESCALE4B, black version H11919
ESCALE4W, white version H11918

| | |
|---|---|
| **Power handling** | 100 W RMS – 400 W peak / 8 ohms |
| **Components** | LF: 1 x 4" 100 W (neodymium magnet) – HF: 1 x 1" 20 W (neodymium magnet) |
| **Max. SPL** | 113 dB max. |
| **Sensitivity (1W/1m)** | 87 dB |
| **Frequency response** | 100 Hz – 20 kHz (-10 dB) |
| **Dispersion** | 80° x 80° HxV |
| **Construction** | Aluminium housing and metal grille with acoustic fabric |
| **Mounting** | Wall-mounted lyre |
| **Connections** | Euroblock and Speakon IN and OUT connectors (1+/1-) |
| **Dimensions** | 140 x (135–165) x 125 mm |
| **Net weight** | 2.4 kg |

An option is available to enable the speaker to be used with the ROT550B (H11630) and ROT550W (H11629) swivel mounts. This option is an M10-to-M8 thread adapter: ESCALEADAPTM10M8 (H11947).

## Dimensions

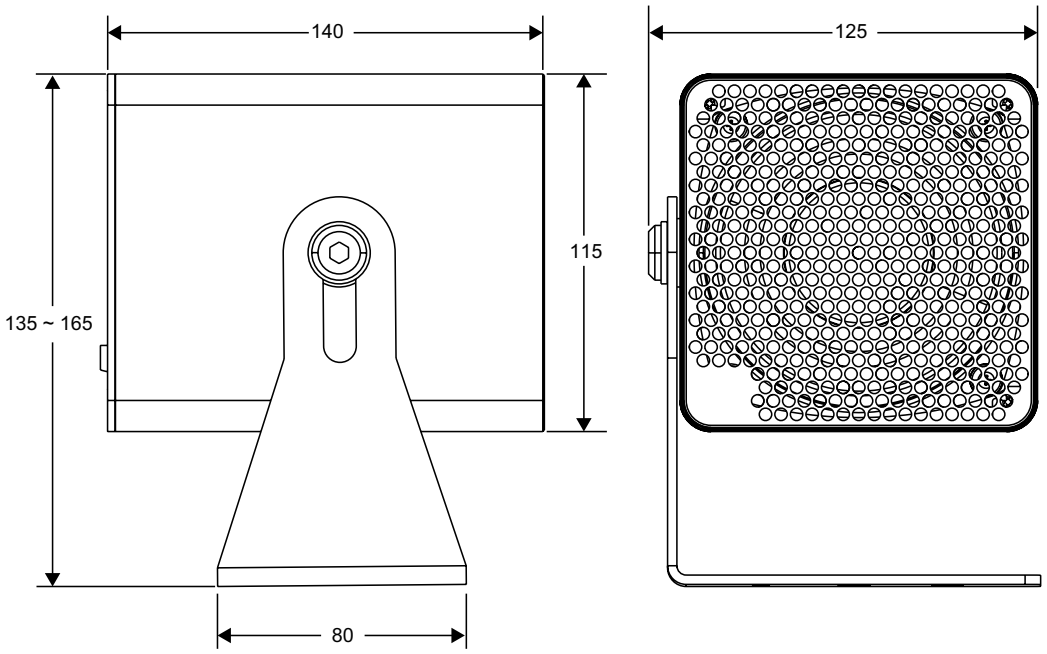


## Wiring

The speaker cabinet has two types of connection, wired in parallel: either Speakon or Eurobloc, as shown opposite.

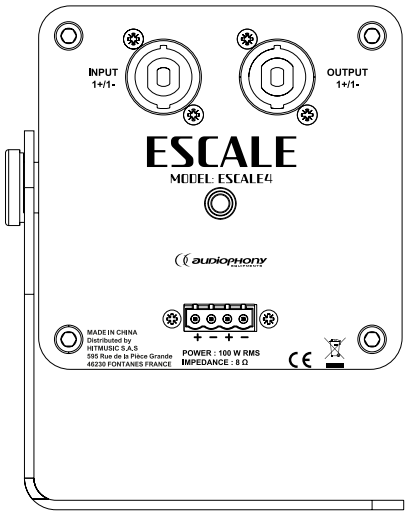


Please ensure you select an amplifier that meets the minimum impedance and power requirements. Use cables with a cross-sectional area of at least 1.5 mm².

## Optional grilles

The ESCALE4Grille is an interchangeable finish grille with acoustic fabric for the ESCALE4 satellite speaker, sold individually and available in 10 colours. It is secured using a magnetic system with four attachment points, which are invisible once in place. Changing the grille takes just a moment, allowing you to switch colours and match the speaker to the room's décor: a single speaker, with an elegant design that adapts to any of your installations.

| | |
|---|---|
| H11936 - ESCALE4Grille - Carbone / Carbon | H11941 - ESCALE4Grille - Ambre / Amber |
| H11937 - ESCALE4Grille - Craie / Chalk | H11942 - ESCALE4Grille - Terracotta / Terracotta |
| H11938 - ESCALE4Grille - Galet / Pebble | H11943 - ESCALE4Grille - Corail / Coral |
| H11939 - ESCALE4Grille - Forêt / Forest | H11944 - ESCALE4Grille - Océan / Ocean |
| H11940 - ESCALE4Grille - Ocre / Ochre | H11945 - ESCALE4Grille - Ardoise / Slate |

Because AUDIOPHONY® takes the utmost care in its products to make sure you only get the best possible quality, our products are subjects to modifications without prior notice. That is why technical specifications and the products physical configuration might differ from the illustrations.
Make sure you get the latest news and updates about the AUDIOPHONY® products on www.audiophony.com
AUDIOPHONY® is a trademark of **HITMUSIC S.A.S** - 595 Rue de la pièce Grande - 46230 FONTANES - FRANCE