8-inch active speaker, 3 x 400 W with DSP, wood-effect finish – Black / White

audiophony EQUIPMENTS

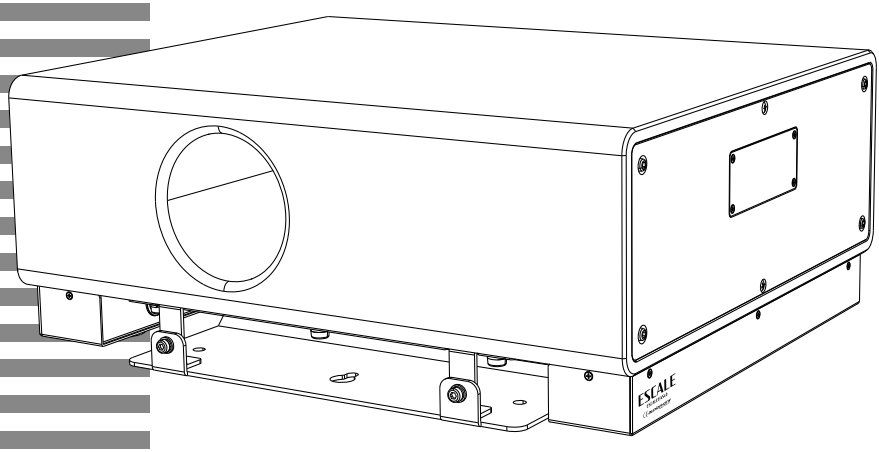

ESCALE8ASubB
ESCALE8ASubW

USER GUIDE

H11914 - H11915 - Version 1 / 09-2026

1 - Safety information

Important safety information

This unit is intended for indoor use only. Do not use it in a wet, or extremely cold/hot locations. Failure to follow these safety instructions could result in fire, electric shock, injury, or damage to this product or other property.

Any maintenance procedure must be performed by a AUDIOPHONY authorised technical service. Basic cleaning operations must thoroughly follow our safety instructions.

This product contains non-isolated electrical components. Do not undertake any maintenance operation when it is switched on as it may result in electric shock.

Symbols used

IMPORTANT

This symbol signals an important safety precaution.

WARNING

The WARNING symbol signals a risk to the user's physical integrity. The product may also be damaged.

CAUTION

The CAUTION symbol signals a risk of product deterioration.

Instructions and recommendations

1 - Please read carefully :
We strongly recommend to read carefully and understand the safety instructions before attempting to operate this unit.

2 - Please keep this manual :
We strongly recommend to keep this manual with the unit for future reference.

3 - Operate carefully this product :
We strongly recommend to take into consideration every safety instruction.

4 - Follow the instructions:
Please carefully follow each safety instruction to avoid any physical harm or property damage.

5 - Avoid water and wet locations :
Do not use this product in rain, or near washbasins or other wet locations.

6 - Installation :
We strongly encourage you to only use a fixation system or support recommended by the manufacturer or supplied with this product. Carefully follow the installation instructions and use the adequate tools.
Always ensure this unit is firmly fixed to avoid vibration and slipping while operating as it may result in physical injury.

7 - Ventilation :
The cooling vents ensure a safe use of this product, and avoid any overheating risk. Do not obstruct or cover these vents as it may result in overheating and potential physical injury or product damage. This product should never been operated in a closed non-ventilated area such as a flight case or a rack, unless cooling vents are provided for the purpose .

8 - Heat exposure :
Sustained contact or proximity with warm surfaces may cause overheating and product damages. Please keep this product away from any heat source such as a heaters, amplifiers, hot plates, etc...

9 - Electric power supply :
This product can only be operated according to a very specific voltage. These information are specified on the label located at the rear of the product.

CAUTION
RISK OF ELECTRIC SHOCK
DO NOT OPEN

WARNING : This unit contains no user-serviceable parts. Do not open the housing or attempt any maintenance by yourself. In the unlikely even your unit may require service, please contact your nearest dealer.
In order to avoid any electrical malfunction, please do not use any multi-socket, power cord extension or connecting system without making sure they are perfectly isolated and present no defect.

WARNING

Sound levels

Our audio solutions deliver important sound pressure levels (SPL) that can be harmful to human health when exposed during long periods. Please do not stay in close proximity of operating speakers.

Recycling your device



• As HITMUSIC is really involved in the environmental cause, we only commercialise clean, ROHS compliant products.
• When this product reaches its end of life, take it to a collection point designated by local authorities. The separate collection and recycling of your product at the time of disposal will help conserve natural resources and ensure that it is recycled in a manner that protects human health and the environment.

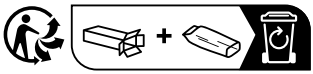

10 - Power cords protection:
Power-supply cords should be routed so that they are not likely to be walked on or pinched by items placed upon or against them, paying particular attention to cords at lugs, convenience receptacles and the point where they exit from the fixture.

11 - Cleaning precautions :
Unplug the product before attempting any cleaning operation. This product should be cleaned only with accessories recommended by the manufacturer. Use a damp cloth to clean the surface. Do not wash this product.

12 - Long periods of non use :
Disconnect the unit's main power during long periods of non use.

13 - Liquids or objects penetration :
Do not let any object penetrate this product as it may result in electric shock or fire. Never spill any liquid on this product as it may infiltrate the electronic components and result in electric shock or fire.

14 - This product should be serviced when :
Please contact the qualified service personnel if :
- The power cord or the plug has been damaged.
- Objects have fallen or liquid has been spilled into the appliance.
- The appliance has been exposed to rain or water.
- The product does not appear to operate normally.
- The product has been damaged.

15 - Inspection/maintenance :
Please do not attempt any inspection or maintenance by yourself. Refer all servicing to qualified personnel.

16 - Operating environment :
Ambient temperature and humidity: +5 - +35°C, relative humidity must be less than 85% (when cooling vents are not obstructed).
Do not operate this product in a non-ventilated, very humid or warm place.

2 – Introduction

The ESCALE8ASub is an ultra-compact active subwoofer, comprising an 8-inch woofer with a 38 mm voice coil, which can be mounted on a wall or ceiling, or concealed beneath furniture. It features a DSP (digital signal processor) module offering functions such as gain, equalisation and programme memory; it supports Bluetooth 5.0 connectivity.
Areas of application: shops, shopping centres, hotel lobbies, bars, tea rooms, background music, etc.

3 - Description

3.1 – Connection panel:

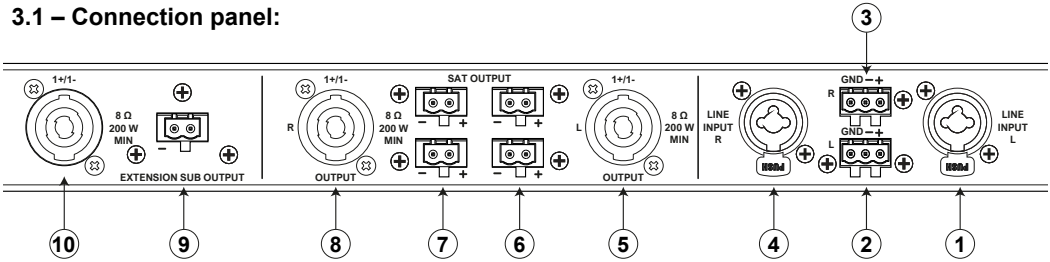

1 – Line-level input on the left-hand side via a combo socket
2 - Line-level input on the left-hand side via a Euroblock connector
3 - Line-level input on the right-hand side via a Euroblock connector
4 - Line-level input on the right-hand side via a combo socket
5 - Left-hand mid/high-frequency output via Speakon connector
6 - Midrange/treble outputs on the left-hand side via Euroblock connectors
7 - Midrange/treble outputs on the right-hand side via Euroblock connectors
8 - Mid/high-frequency output on the right-hand side via a Speakon connector
9 - Additional output via Euroblock terminal block
10 - Additional output via Speakon socket

3.2 – Power supply panel:

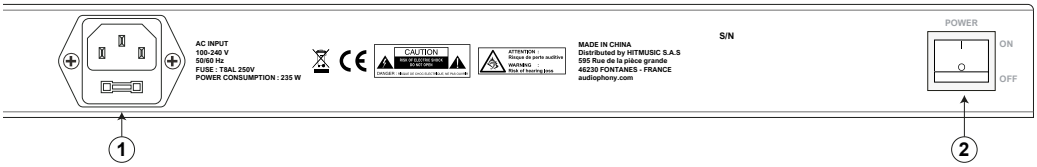

1 - Power input via IEC plug: AC 100–240 V – 50/60 Hz – 235 W
2 - Power button

3.3 – Display:

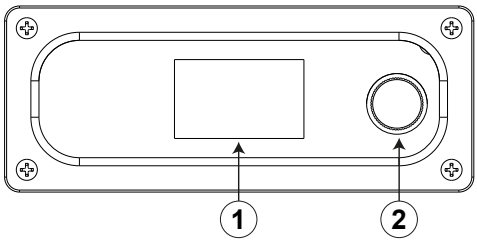

1 - LCD screen
2 - Encoder knob with push function

4 - DSP menu

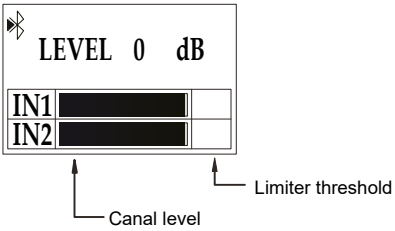

The overall level can be adjusted from -80 dB to 0 dB. If a signal is present at either of the inputs (IN1 and IN2), the display will show their respective levels.

If Bluetooth is enabled, the Bluetooth logo will appear in the top-left corner of the display. If Bluetooth is not connected, this logo will flash. If Bluetooth is connected, this logo will stop flashing.

Press the button to access the full DSP menu

EXIT	Exits the DSP settings and returns to the main screen	
MODE	2.1	A preset that optimises the use of two ESCALE4s and one ESCALE8ASub
	2.2	A preset that optimises the use of two ESCALE4s, one ESCALE8ASub and one ESCALE8Sub
	4.1	A preset that optimises the use of four ESCALE4s and one ESCALE8ASub
	4.2	A preset that optimises the use of four ESCALE4s, one ESCALE8ASub and one ESCALE8Sub
TREBLE	Treble level adjustment from -12 dB to +12 dB	
MID	Mid-range level adjustment from -12 dB to +12 dB	
BASS	Bass level adjustment from -12 dB to +12 dB	
BT	Enabling and disabling the Bluetooth function. OFF by default	
SUB LEVEL	Subwoofer level adjustment from -80 dB to +10 dB. Note: A significant increase in equalisation is very risky and may cause the subwoofer to overheat when operating at maximum load.	
CONTRAST	Adjust the display contrast setting from 0 to 6. Recommended setting: 4	
STORE	Saves the selected mode, the equaliser settings and the master volume. Five different settings can be saved.	
RECAL	Allows you to recall one of the settings saved using the STORE function.	

RESET	Deletes all saved settings and the setting currently in use. Please exercise caution when carrying out this operation.
INFO	Displays the current firmware version.

5 - Mounting system

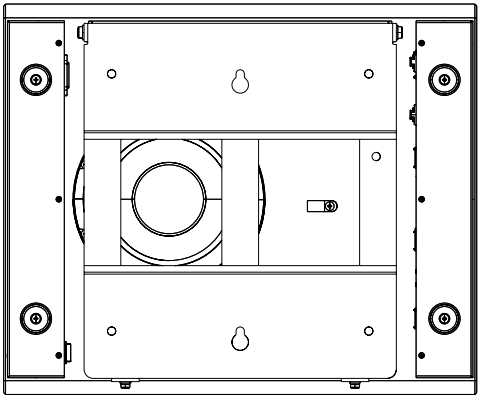

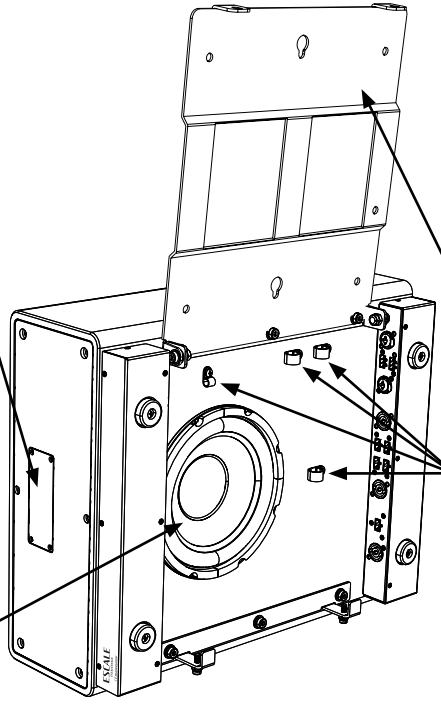

A cover plate is fitted over the display and the button to protect the settings and ensure a clean, understated finish.

To make installation easier, it is advisable to tilt the bracket.

It is very important to ensure that the input and output cables are securely fastened using cable clamps to prevent vibration-induced noise.

The speaker, which is mounted at the back, moves between the cabinet and the wall or ceiling, enabling it to reproduce low frequencies more effectively.

6 - Typical set-ups

6.1 – MODE 2.1:

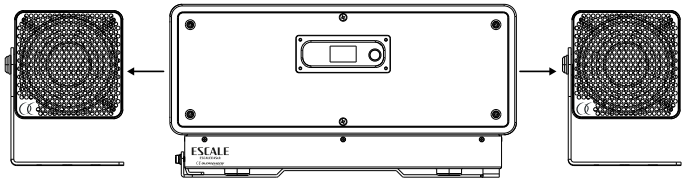

6.2 – MODE 2.2:

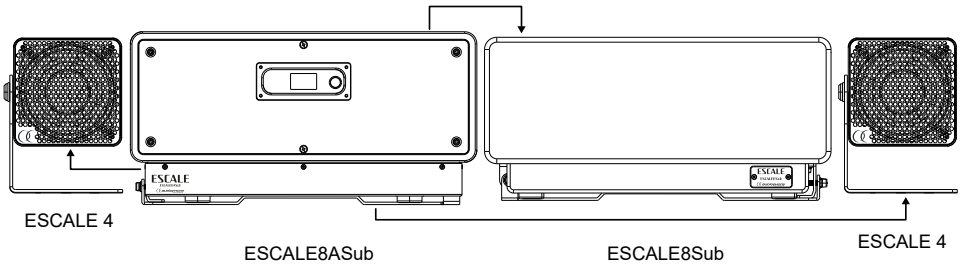

6.3 – MODE 4.1:

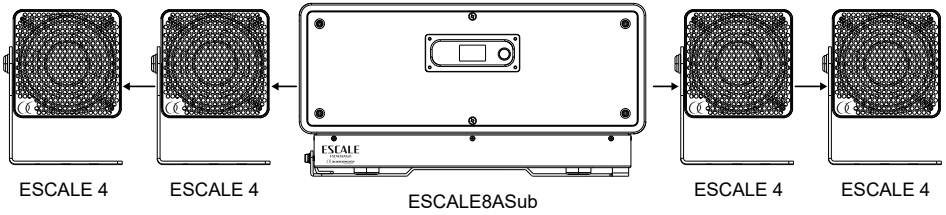

6.4 – MODE 4.2:

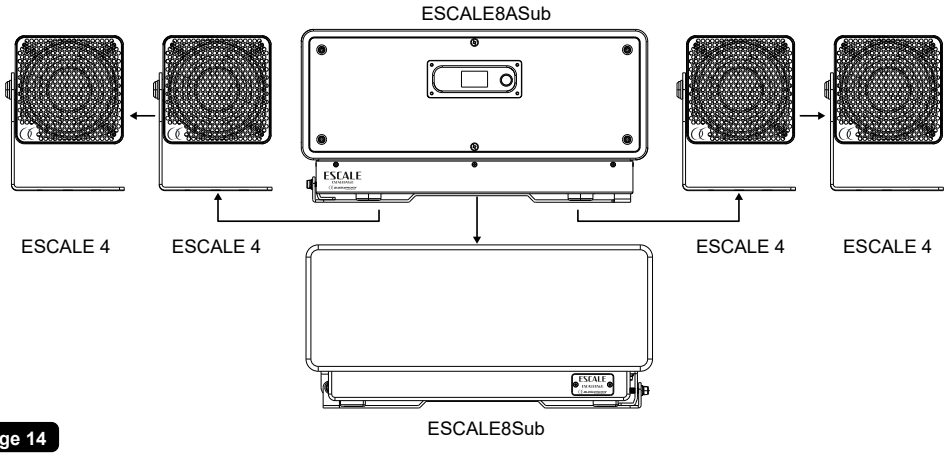

7 - Dimensions

7.1 – Mounting plate:

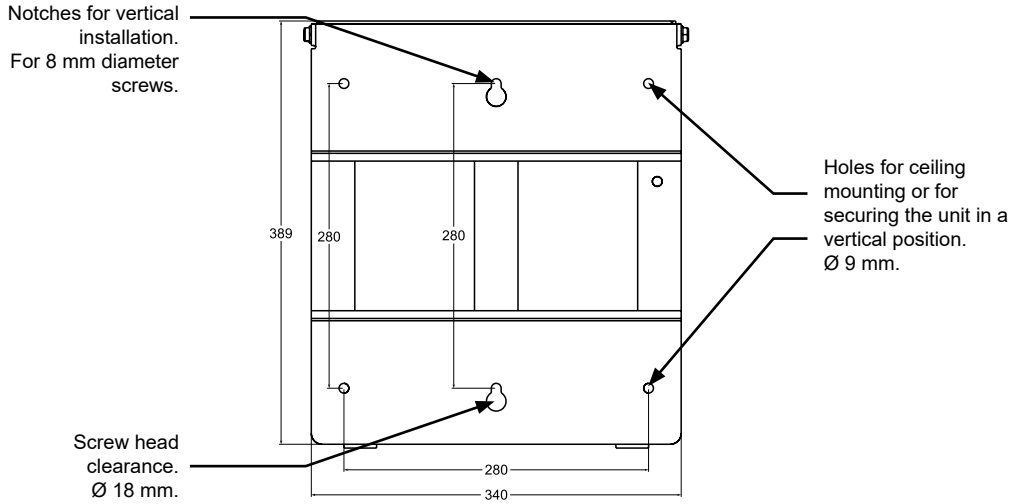

7.2 – General:

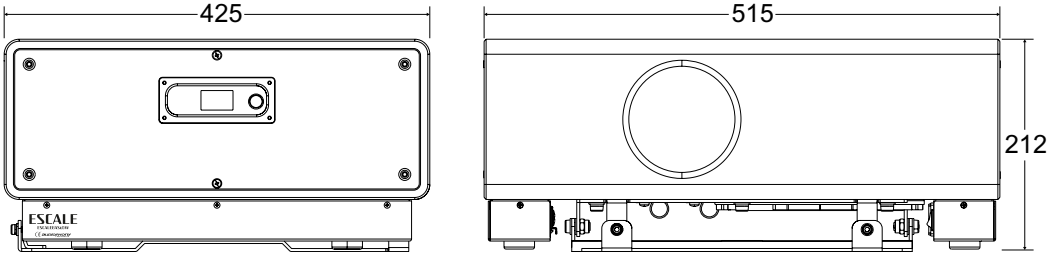

8 - Technical specifications

Bluetooth	5.0
Loudspeaker	8" speaker; 38 mm voice coil
Amplification	3 x 400 W (4 ohms) / 3 x 200 W (8 ohms)
Frequency response	45 Hz –120 Hz
Input sensitivity	0 dBU
Max SPL (@1 m)	119 dB
Input connectors	2 x XLR/jack combo sockets 2 x 3-pin Euroblock connectors
Output connectors	3 x 4-pin Speakon connectors 5 x 2-pin Euroblock connectors
Dimensions	515 × 212 × 425 mm
Power supply	AC 100 V–240 V – 50/60 Hz – 235 W
Weight	17.75 kg

Because AUDIOPHONY® takes the utmost care in its products to make sure you only get the best possible quality, our products are subjects to modifications without prior notice. That is why technical specifications and the products physical configuration might differ from the illustrations.
Make sure you get the latest news and updates about the AUDIOPHONY® products on www.audiophony.com
AUDIOPHONY® is a trademark of HITMUSIC S.A.S - 595 Rue de la pièce Grande - 46230 FONTANES - FRANCE