audiophony
EQUIPMENTS

Passive 8-inch 200W speaker with wood finish – Black / White

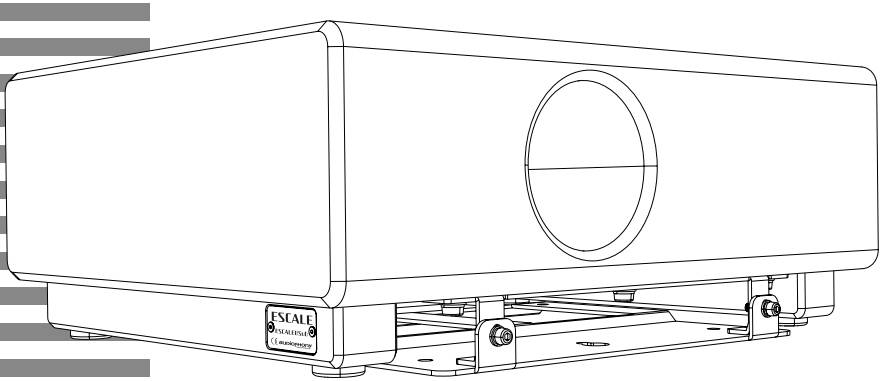

ESCALE8SubB
ESCALE8SubW

USER GUIDE

H11916 - H11917 - Version 1 / 09-2026

1 - Safety information

Important safety information



This unit is intended for indoor use only. Do not use it in a wet, or extremely cold/hot locations. Failure to follow these safety instructions could result in fire, electric shock, injury, or damage to this product or other property.



Any maintenance procedure must be performed by a AUDIOPHONY authorised technical service. Basic cleaning operations must thoroughly follow our safety instructions.



This product contains non-isolated electrical components. Do not undertake any maintenance operation when it is switched on as it may result in electric shock.

Symbols used



This symbol signals an important safety precaution.



The WARNING symbol signals a risk to the user's physical integrity.
The product may also be damaged.



The CAUTION symbol signals a risk of product deterioration.



WARNING : This unit contains no user-serviceable parts. Do not open the housing or attempt any maintenance by yourself. In the unlikely even your unit may require service, please contact your nearest dealer.
In order to avoid any electrical malfunction, please do not use any multi-socket, power cord extension or connecting system without making sure they are perfectly isolated and present no defect.



Sound levels

Our audio solutions deliver important sound pressure levels (SPL) that can be harmful to human health when exposed during long periods. Please do not stay in close proximity of operating speakers.

Recycling your device



• As HITMUSIC is really involved in the environmental cause, we only commercialise clean, ROHS compliant products.
• When this product reaches its end of life, take it to a collection point designated by local authorities. The separate collection and recycling of your product at the time of disposal will help conserve natural resources and ensure that it is recycled in a manner that protects human health and the environment.

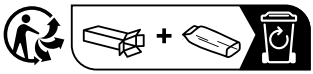

Instructions and recommendations

1 - Please read carefully :
We strongly recommend to read carefully and understand the safety instructions before attempting to operate this unit.

2 - Please keep this manual :
We strongly recommend to keep this manual with the unit for future reference.

3 - Operate carefully this product :
We strongly recommend to take into consideration every safety instruction.

4 - Follow the instructions:
Please carefully follow each safety instruction to avoid any physical harm or property damage.

5 - Avoid water and wet locations :
Do not use this product in rain, or near washbasins or other wet locations.

6 - Installation :
We strongly encourage you to only use a fixation system or support recommended by the manufacturer or supplied with this product. Carefully follow the installation instructions and use the adequate tools.
Always ensure this unit is firmly fixed to avoid vibration and slipping while operating as it may result in physical injury.

7 - Ventilation :
The cooling vents ensure a safe use of this product, and avoid any overheating risk.
Do not obstruct or cover these vents as it may result in overheating and potential physical injury or product damage. This product should never been operated in a closed non-ventilated area such as a flight case or a rack, unless cooling vents are provided for the purpose .

8 - Heat exposure :
Sustained contact or proximity with warm surfaces may cause overheating and product damages. Please keep this product away from any heat source such as a heaters, amplifiers, hot plates, etc...

9 - Electric power supply :
This product can only be operated according to a very specific voltage. These information are specified on the label located at the rear of the product.

10 - Power cords protection:
Power-supply cords should be routed so that they are not likely to be walked on or pinched by items placed upon or against them, paying particular attention to cords at lugs, convenience receptacles and the point where they exit from the fixture.

11 - Cleaning precautions :
Unplug the product before attempting any cleaning operation. This product should be cleaned only with accessories recommended by the manufacturer. Use a damp cloth to clean the surface. Do not wash this product.

12 - Long periods of non use :
Disconnect the unit's main power during long periods of non use.

13 - Liquids or objects penetration :
Do not let any object penetrate this product as it may result in electric shock or fire.
Never spill any liquid on this product as it may infiltrate the electronic components and result in electric shock or fire.

14 - This product should be serviced when :
Please contact the qualified service personnel if :
- The power cord or the plug has been damaged.
- Objects have fallen or liquid has been spilled into the appliance.
- The appliance has been exposed to rain or water.
- The product does not appear to operate normally.
- The product has been damaged.

15 - Inspection/maintenance :
Please do not attempt any inspection or maintenance by yourself. Refer all servicing to qualified personnel.

16 - Operating environment :
Ambient temperature and humidity: +5 - +35°C, relative humidity must be less than 85% (when cooling vents are not obstructed).
Do not operate this product in a non-ventilated, very humid or warm place.

2 – Introduction

The ESCALE8Sub is an ultra-slim 8-inch passive subwoofer (just 20 cm deep) designed to combine acoustic performance with a discreet design.

Its loudspeaker is fitted with a 1.5-inch (38 mm) long-excursion voice coil with high thermal resistance, combined with an aluminium modulation ring. This cutting-edge technology drastically reduces distortion whilst optimising heat dissipation, ensuring a longer service life for the component and sound of exceptional purity, dynamism and latency-free performance.

Thanks to its compact and stylish bass-reflex enclosure, the ESCALE8Sub offers unrivalled installation versatility: it can be mounted on the wall, suspended from the ceiling or tucked away under a piece of furniture.

Ideal applications: Shopping centres, hotel lobbies, bars, restaurants, etc.

3 - Description

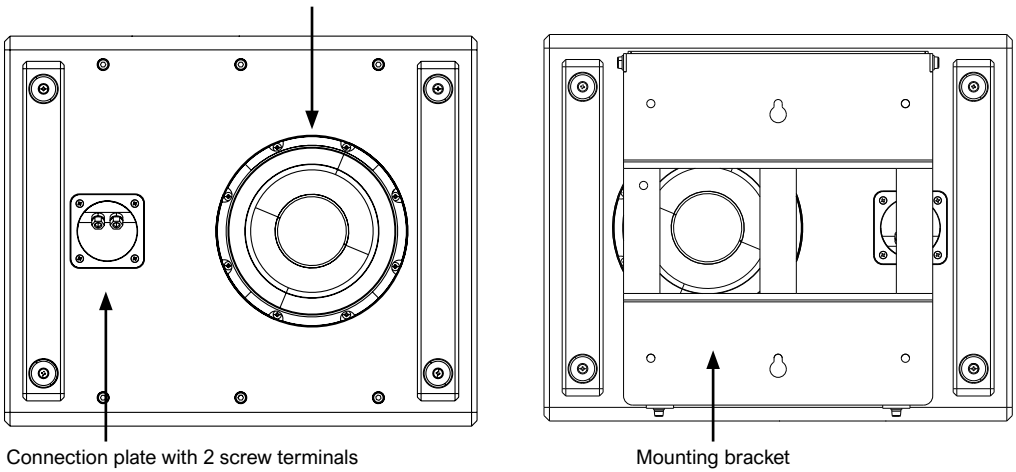

4 - Mounting system

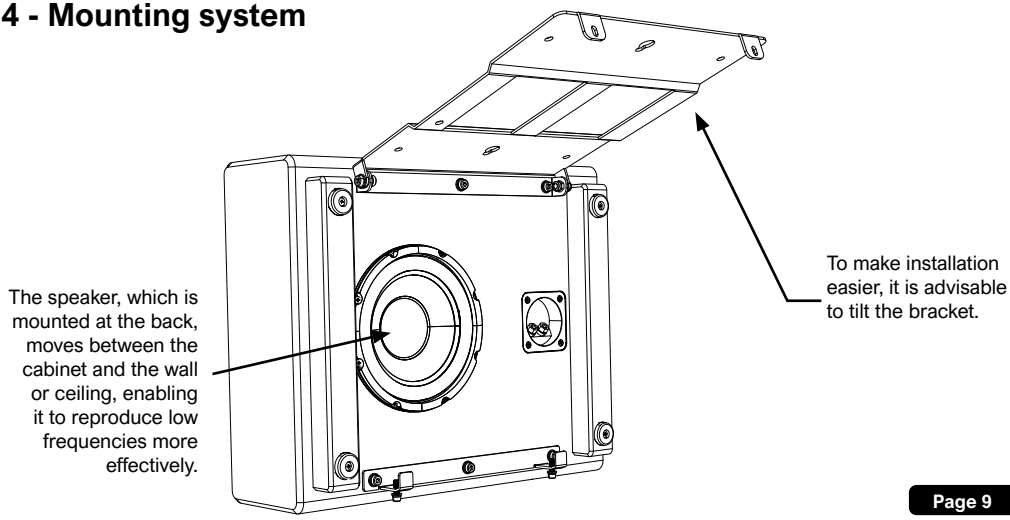

5 - Typical set-ups

This passive subwoofer can be powered by the ESCALE8ASub active subwoofer, or it can be incorporated into a system and powered by an external amplifier such as the AiO4125.

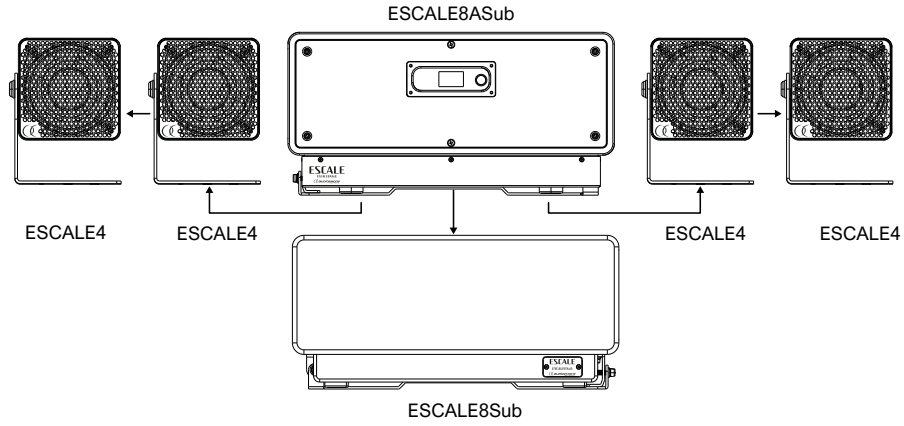

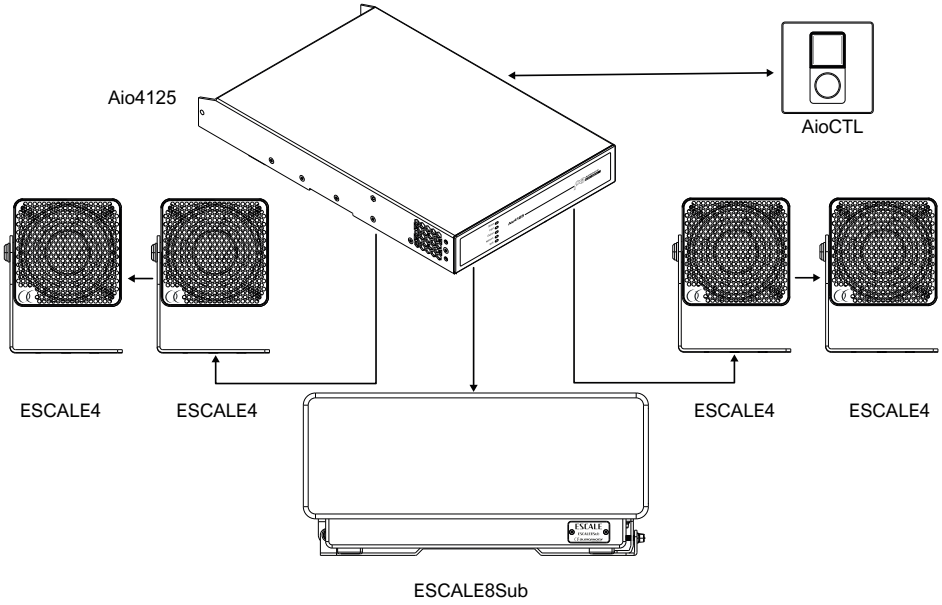

6 - Dimensions

6.1 – General:

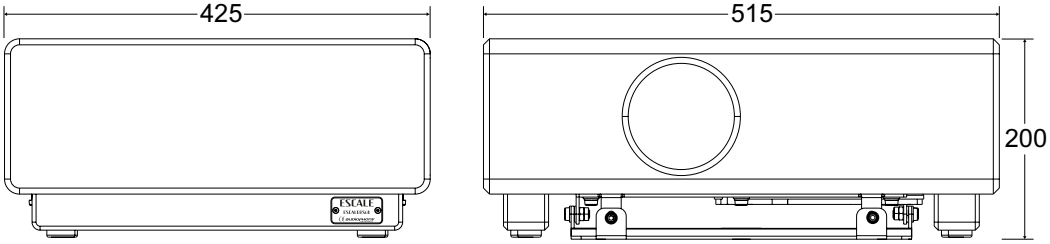

6.2 – Mounting plate:

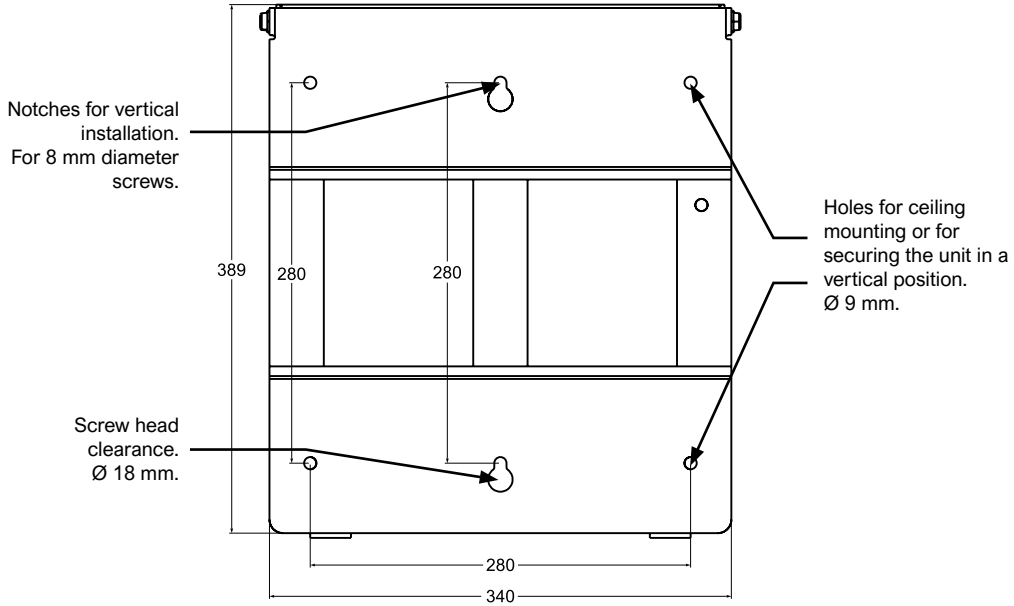

7 - Technical specifications

Loudspeaker	8" speaker; 1.5" (38 mm) voice coil
Impedance	8 ohms
Rated power	200 W RMS
Frequency response	45 Hz – 150 Hz
Sensitivity (1 W @ 1 m)	89 dB
Max SPL (@1 m)	119 dB
Connectors	2 x screw terminals
Dimensions	515 × 200 × 425 mm
Weight	13 kg

Because AUDIOPHONY® takes the utmost care in its products to make sure you only get the best possible quality, our products are subjects to modifications without prior notice. That is why technical specifications and the products physical configuration might differ from the illustrations.
Make sure you get the latest news and updates about the AUDIOPHONY® products on www.audiophony.com
AUDIOPHONY® is a trademark of **HITMUSIC S.A.S** - 595 Rue de la pièce Grande - 46230 FONTANES - FRANCE